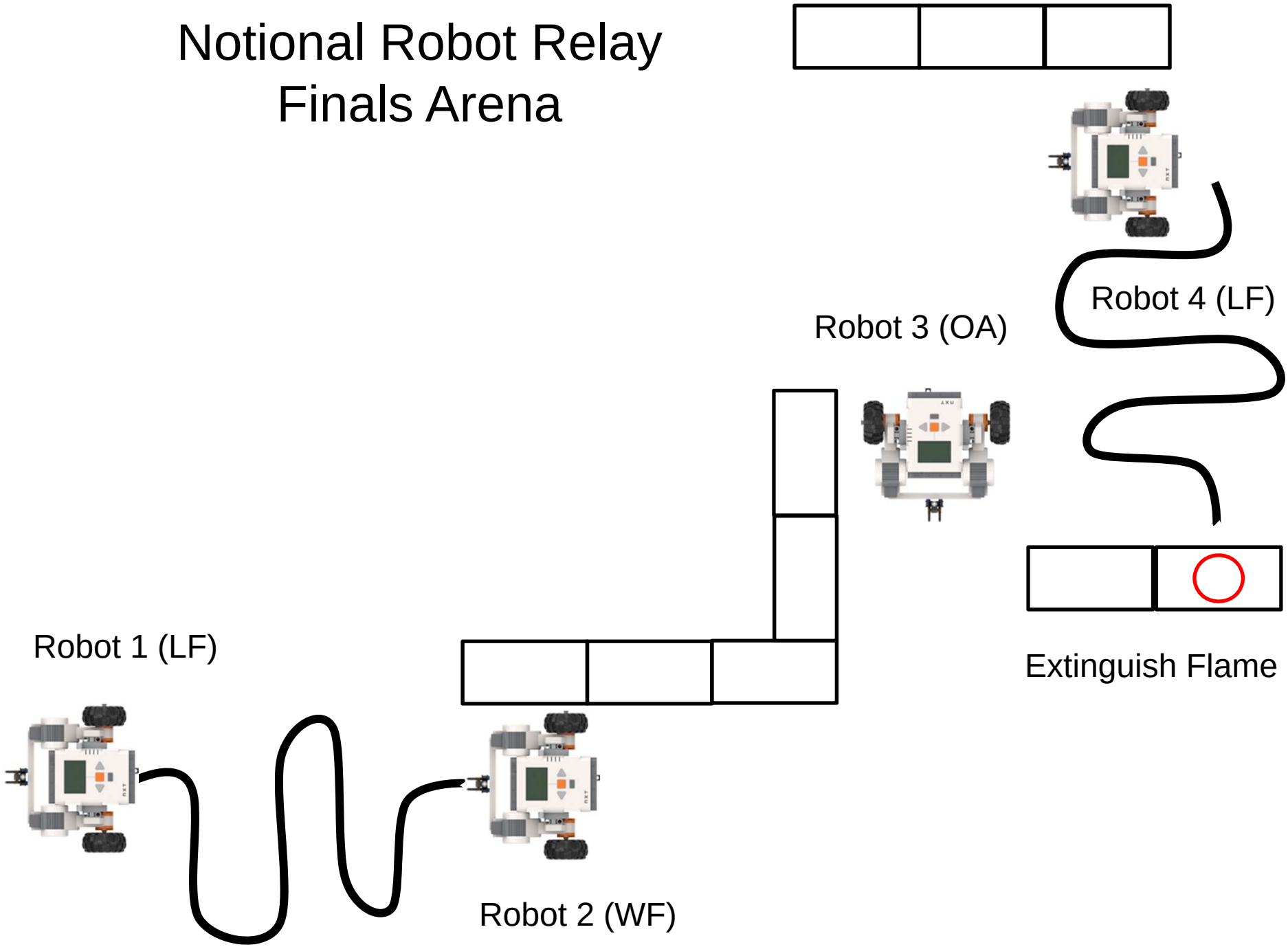# Notional Robot Relay Finals Arena