Drones and Autonomous Systems Lab @ UNLV

Transformer Darwin (#001)

Jean Chagas Vaz

Technical Design Document

DARwIn-OP (Spring/Summer 2017)

TABLE OF CONTENTS

1 INTRODUCTION

1.1 PURPOSE OF THIS DOCUMENT

This document is a Technical Design Document for use by students from Drones and Autonomous Systems Lab (DASL) at the University of Nevada Las Vegas Projects. It provides guidance to a potential reproduction of the experiments conducted throughout this project.

1.2 SPECIFIC DESIGN CONSIDERATIONS

This project uses DARwIn-OP which is "a Dynamic Anthropomorphic Robot with Intelligence - Open Platform that is an affordable, miniature-humanoid-robot platform with advanced computational power, sophisticated sensors, high payload capacity, and dynamic motion ability to enable many exciting research and education activities." [Robotis.com]. Therefore, all the attachments designed to transform DARwIn-OP from biped to rolling locomotion humanoid are based upon DARwIn-OP manufacturer's design.

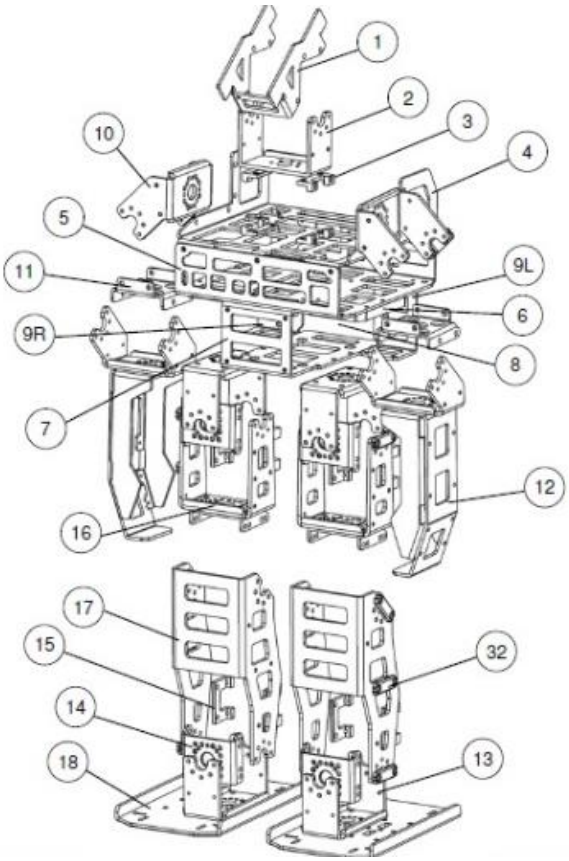

Part Number	Description
1	Head Bracket
2	Neck Bracket
3	Chest Actuator Connectors
4	Upper Chest Bracket
5	Lower Chest Bracket
6	Mounting Bracket
7	Battery Bracket
8	Battery Cover Bracket
9L	Back Left Pelvic Bracket
9R	Back Right Pelvic Bracket
10	Angled Actuator Bracket
11	Arm Actuator Mount
12	Hand
13	U-Actuator Bracket
14	Leg Actuator Mount
15	Actuator Connector
16	Thigh Bracket
17	Knee Bracket
18	Foot
32	Cable Holder

Fig. 1. DARwIn-OP's parts [http://www.robotsource.org]

1.3 SCOPE

The goal of this design project is to attach wheels onto DARwIn-OP's knees. In order to do that, we shall design parts that can be easily attached to any DARwIn-OP. Moreover the users can further study the advantages and disadvantages between normal bipedal gait locomotion and rolling locomotion. The ultimate goal is to have a similar locomotion capability as DRC-Hubo. Hence, compare the performance between both robots.

2 TECHNICAL DESIGN REQUIREMENTS (TDR)

The technical design requirements serves as foundation to develop the extra attachments for DARwin-OP to transform itself from walking to rolling mode.

2.1 TRANSFORMING DARWIN TDR

The table below shows: the specific requirements regarding the wheel's design advantages power requirements, slope limitations, roll-over obstacles, speed and range); the technical design requirements in terms of assembly and standard tools.

Task	Requirements	Objectives	Reason	Thresholds	Photos
Wheel's placement	Wheels need to be attached to the knee. Using the knee frame.	The user can assemble the parts in 10 min using an standard allen wrench (1.5 mm)	Costumer usually do not want to use especial tools. And easier the better	Can assemble in 16.5 mim using an standard allen wrench (1.5 mm)	
Roll-over objects	A rubber gripper might be added to the plastic(3D printed) wheel, in order to roll over bigger objects.	The humanoid should be able to roll over flat objects. Within a height range from 4 mm to 7.5 mm. Roll over debris with an average diameter of 3.5 mm	Most of the time there is an uneven terrain. In other words the surface will not always be smooth as we want it to be.	It can rollover flat objects with maximum 9.74 mm height. And 5.81 mm dimeters for sphere like debris.	
Speed	DARwin-OP must roll at least 2 times faster than walk(7 cm/s).	The motion speed could reach 24 cm/s with the Dynamixel full speed rotation.	Rolling mode will increase significantly the robot's overall motion speed. Vibration is one of the issues during bipedal gait. Therefore reduce vibration while moving is also an advantage.	Transform DARwin-OP into a rolling mode humanoid. Capable of move at a speed of 15 cm/s	
Battery Life	Saving energy is a constant issue. 1000mAh battery runs about 25 minutes with all Dynamixel operating.	Have DARwIn-OP standard battery last for 40 mim in rolling-mode.	By using 2 servos to locomotion saves energy, hence the humanoid can operate for a longer time.	Have the battery optimized by 22 mim usage life.	

Task	Requirements	Objectives	Reason	Thresholds	Photos
Standard Tools usage	Make sure that the entire assemble can be done using an ordinary "*1.5mm allen hex tool*" and "*Phillips Screw Driver SD-01*". Both tools come with DARwin-op/OP2 package.	Have the costumer familiar with ordinary tools	This will make the assembling easy and quick, once advance tools are not needed	Most of the DARwIn-OP users have used an allen hex tool.	
Fixture plate	The 3D printed flat plate will hold the Dynamixel+wheel and attach itself to the knee frame.	Design a CAD model and 3D print it to support the entire humanoid mass(2.9 Kg). Therefore, such plate should support at least 3.5 kg	The cost of #D print parts are very low. However the down side is the time that the printing process require.	According our strain test calculations the fixture plate can support the minimum 2.9 Kg	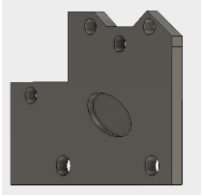
Standard Bolts	The screws ought to be from the ROBOTIS standard bolts family.	Have all the attachments use the Wrench Bolt 2.5M from ROBOTIS.	Cheap to purchase. Since metric sizes are always easy to find at stores(e.g Lowes)	Use other commonly found bolts.	
Actuators	The Actuator should preferably be the same as the others already in DARwin-OP.	By using the MX-28T with Physical size: 35.6x50.6x35.5 mm Stall Torque: 2.5 N.m	Since DARwin OP already has 20 MX-28T add two extra is convenient in terms of software.	Physical size: 30x45x35 mm Stall Torque: 2 N.m	
Navigation Sensors	For navigation the DARwin should use its on-board camera	Use a USB 2Mb camera for standard color detection (RGB). No additional sensors.	The costumer does not want to buy extra sensors. We might need a sensor suite	Have USB camera with a minimum of 1.5Mb resolution	

Plow plates	They need to be attached to the front of the humanoid. In order to push the debris out of the way. The plates must be designed so that does not influence to the DARwin-OP's standard movement.	The plow plates have to push solid debris (dimension ranging 20x70x25 mm) weighting ≈250 g. And the plow plates should move the debris 150 mm/s	Plow plates can remove residues while rolling forward. **Focus**: debris-clearing	The plow plates ought to push solid debris (dimension ranging 15x60x20 mm) with weight 200 g. And plow plates that can move the debris 100 mm/s	

1.1 SCOPE

#1 This section should:

a. identify the products to be produced;

b. explain what the proposed system will do (and will not do, if necessary);

c. define relevant benefits, objectives and goals as precisely as possible;

d. define any security risks associated with the system;

e. be consistent with similar statements in higher-level specifications, if they exist.

1.2 DEFINITIONS, ACRONYMS AND ABBREVIATIONS

1.3 REFERENCES

1.4 OVERVIEW

2 SYSTEM OVERVIEW

2.1 SYSTEM CHARACTERISTICS

2.2 SYSTEM ARCHITECTURE

2.3 INFRASTRUCTURE SERVICES

3 SYSTEM DESIGN

3.1 DESIGN METHOD AND STANDARDS

3.2 DOCUMENTATION STANDARDS

3.3 NAMING CONVENTIONS

3.4 PROGRAMMING STANDARDS

3.5 SOFTWARE DEVELOPMENT TOOLS

3.6 OUTSTANDING ISSUES

3.7 DECOMPOSITION DESCRIPTION

4 COMPONENT DESCRIPTION

4.1 COMPONENT IDENTIFIER

4.1.1 Type

4.1.2 Purpose

4.1.3 Function

4.1.4 Subordinates

4.1.5 Dependencies

4.1.6 Interfaces

4.1.7 Resources

4.1.8 References

4.1.9 Processing

4.1.10 Data

5 SOFTWARE REQUIREMENTS TRACEABILITY MATRIX

DOCUMENT CONTROL

Title: Technical Design Document

Issue: Transformer DARwIn-OP

Date: 25 March 2017

Author: Jean Chagas Vaz

Distribution: Drones and Autonomous Systems Lab (DASL)

Filename: DARwIn-OP Spring/Summer 2017

DOCUMENT SIGNOFF

Nature of Signoff	Person	Signature	Date	Role
Author	Jean Chagas Vaz			Project Member
Reviewers				

DOCUMENT CHANGE RECORD

Date	Version	Author	Change Details
28 March 2017	Draft 1	Jean Chagas Vaz	First complete draft
			Review and update
			Updating format
			Apply review comment and issue